FEMALE END VIEW

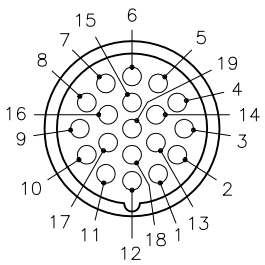

1 = WHITE/BLACK
2 = BLACK/WHITE
3 = WHITE/GREEN
4 = GREEN/WHITE
5 = WHITE/RED
6 = DRAIN 9
7 = RED/WHITE
8 = WHITE/ORANGE
9 = ORANGE/WHITE
10 = WHITE/BLUE
11 = BLUE/WHITE
12 = GREEN/YELLOW
13 = WHITE/BROWN
14 = BROWN/WHITE
15 = WHITE/YELLOW
16 = YELLOW/WHITE
17 = WHITE/VIOLET
18 = VIOLET/WHITE
19 = N/C

M23 connector

WIRING DIAGRAM

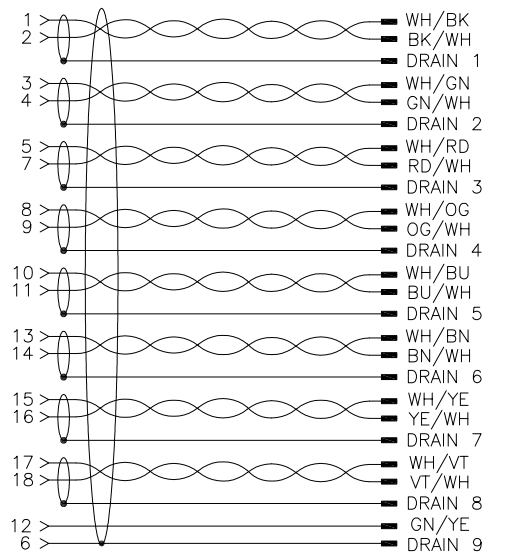

SPECIFICATIONS

CONTACT CARRIER MATERIAL	NYLON or PBT
CONTACT MATERIAL/PLATING	BRASS/GOLD
HOUSING/LOCKNUT MATERIAL/FINISH	STAINLESS STEEL/PASSIVATED
O-RING/GASKET MATERIAL	RUBBER (NBR or FPM)
RATED CURRENT [A]	9.0 A (PINS 12), 2.0 A (ALL OTHERS)
RATED VOLTAGE [V]	150 V
OUTER JACKET MATERIAL/COLOR	PVC/PLUM
CONDUCTOR INSULATION MATERIAL	PVC
NUMBER OF CONDUCTORS [AWG]	16x22 AWG, 1x18 AWG GROUND
DRAIN/SHIELD	9x22 AWG DRAINS/ALUMINUM FOIL SHIELDED
CONDUCTOR ARRANGEMENT	8 SHIELDED TWISTED PAIR W/DRAIN, 1 GND, 1 DRAIN
TEMPERATURE RANGE	-40°C to +105°C (-40°F to +221°F)
PROTECTION CLASS	MEETS IEC IP67
CABLE RATINGS	UL: ITC/PLTC/AWM, 105C, 300V CSA: CMG/AWM, 105C, 300V
MAXIMUM PANEL THICKNESS	3.5 [0.138]

PANEL CUTOUT (TYPICAL)

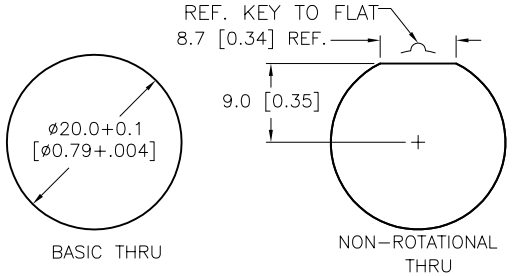

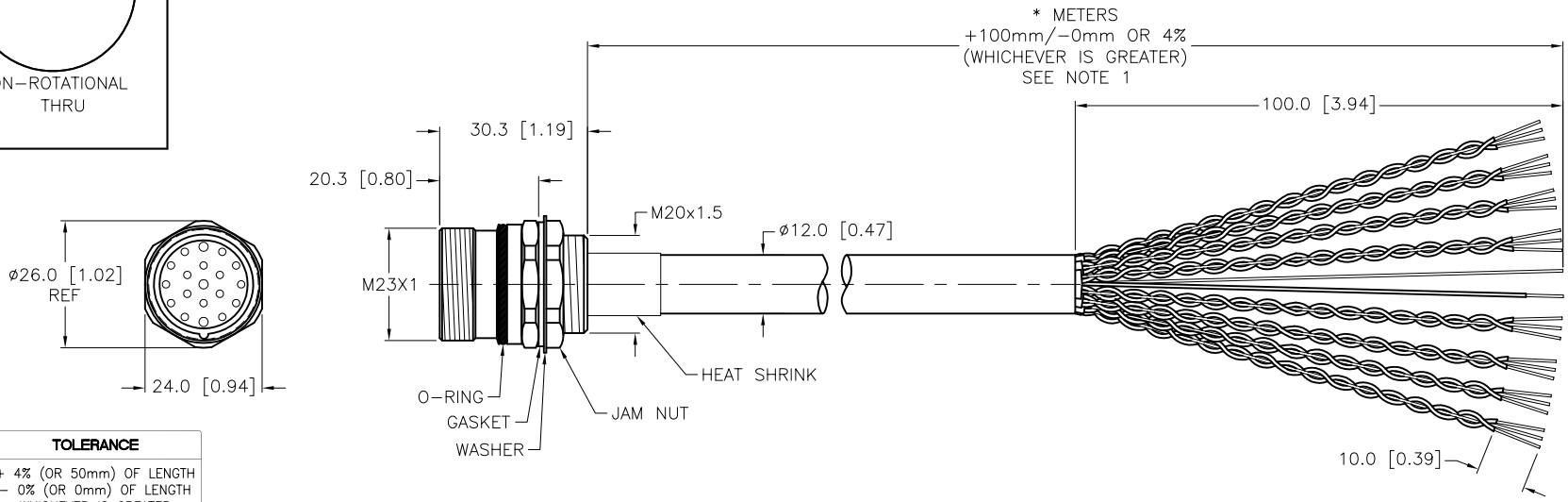

SOURCE DRAWING - FOR REFERENCE ONLY

CABLE LENGTH	TOLERANCE
ALL LENGTHS	+ 4% (OR 50mm) OF LENGTH - 0% (OR 0mm) OF LENGTH WHICHEVER IS GREATER

STRIP LENGTH	TOLERANCE
0-7mm	±0.5mm
8-29mm	±1.0mm
30-49mm	±2.0mm
50-69mm	±3.0mm
70-100mm	±4.0mm
OVER 100mm	±5.0mm

NOTES:

1. "*" INDICATES CABLE LENGTH IN METERS. CONTACT TURCK TO ORDER SPECIFIC LENGTHS.

REV	DESCRIPTION	BY	DATE	ECO NO.
E	DRAWING PROCESSED AS PART OF ECO 39332	KMY	07/10/12	39332

RELATED DOCUMENTS
1.
2.
3.
4.

3RD ANGLE PROJECTION

THIS DRAWING IS CONFIDENTIAL AND THE PROPERTY OF TURCK INC. USE OF THIS DOCUMENT WITHOUT WRITTEN PERMISSION IS PROHIBITED.

TURCK INC
High Technology Sensors and Automation Controls

3000 CAMPUS DRIVE
MINNEAPOLIS, MN 55441
1-800-544-7769
(763) 553-7300
(763) 553-0708 fax
turck.com

MATERIAL: SEE SPECIFICATIONS

FINISH: SEE SPECIFICATIONS

ALL DIMENSIONS DISPLAYED ON THIS DRAWING ARE FOR REFERENCE ONLY

CONTACT TURCK FOR MORE INFORMATION

DRFT: RWC | DATE: 02/03/05
APVD: | SCALE: 1=1.5

UNIT OF MEASUREMENT
MILLIMETER [INCH]
DO NOT SCALE THIS DRAWING

DESCRIPTION: P-CKFLV 19-959-*

IDENTIFICATION NO.:

REV: E

FILE: 777007007

SHEET 1 OF 1

Approved 07/26/2012, work order #31023 by A.A.